Computer Communications 218 (2024) 157–165

Contents lists available at ScienceDirect

Computer Communications

journal homepage: www.elsevier.com/locate/comcom

Radio-in-the-Loop simulation and emulation modeling for energy-efficient and cognitive Internet of Things in smart cities: A cross-layer optimization case study

Sebastian Böhm *, Hartmut König

Brandenburg University of Technology (BTU), P.O. Box 10 13 44, Cottbus, Germany

ARTICLE INFO

Keywords:
Hardware-in-the-loop
Radio-in-the-loop
Simulation
Emulation
Wireless sensor networks
Cross-layer optimization
Cognitive radio
Cognitive iot

ABSTRACT

Wireless communication technologies and Internet of Things (IoT) applications are the main drivers of upcoming sustainable smart networks which require an effective resource management. The reduction of the transmission energy consumption and the efficient utilization of the available spectrum for wireless communication, for instance, have to be enabled by energy-efficient and cognitive IoT networks. These are implemented through optimized communication protocol stacks and algorithms that rely on actual physical layer and channel state information. The modeling and the prototype evaluation of protocol optimization approaches are mainly driven by pure simulation studies with abstracted physical layer and channel models. With the Radio-in-the-Loop (RIL) simulation (S. Böhm and H. König, 2023) and modeling (S. Böhm and H. König, 2021), we have created an evaluation approach that integrates real wireless hardware and radio environments into the simulation of protocol sequences and algorithms. In this paper, we summarize the fundamentals of our basic methodology and demonstrate a cross-layer optimization case study for energy efficient modeling using software-defined radios. We exemplary show the scenario of a receiver-sensitivity control to increase the energy efficiency of receiver-dominated IoT nodes in Smart City networks.

1. Introduction

The Internet of Things (IoT) ecosystem of connected devices and sensors is growing rapidly. The next stage of expansion of smart devices and applications will be driven in spades by sustainable *Smart City* concepts. Comparable to wireless protocols for *Smart Home* applications, Smart City IoT technologies are also very diverse. Besides *cellular Internet of Things (IoT)* specifications (e.g., *LTE-M*, or *NB-IoT*), also wireless access technologies operating in license-free bands (e.g., *LoRaWAN*, or *Wi-Fi HaLow*) play a crucial role in Smart City automation concepts and applications. In case of Low Rate (LR-WPAN), also *Bluetooth LE*, or Institute of Electrical and Electronics Engineers (IEEE) 802.15.4 as basis for *ZigBee* or *Thread* are candidates of choice to implement wireless automation systems in the urban area. In particular, the environments in these new urban application areas are potentially very diverse. The transceivers must adapt to the dynamically changing conditions on the wireless radio channels. To this end, it is beneficial to consider cognitive radio decisions also at the higher protocol layers and applications related to wireless transmissions at the physical layer.

Simulation studies are usually the preferred preliminary step to analyze and evaluate new algorithms and protocol procedures. Accurate modeling of radio channel interactions and wireless transmissions are not feasible with reasonable computational effort here. Due to the nature of Discrete Event Simulation (DES), wireless link layer specification models usually do not include all the radio link features and services of the Medium Access Control (MAC) and PHY layers (e.g., ED). They usually omit specification details. For current research challenges in wireless transmission systems, however, these features need to be considered in detail. Therefore, we have to pose questions about how to achieve a modeling of radio interaction, complex physical phenomena, and the coexistence with other wireless technologies within pure simulations.

The method of analog *radio channel emulation* in real hardware wireless testbeds is one of the last evaluation steps. It is mostly used for performance measurements. This emulation technique allows one to set up reproducible wireless channel conditions for fully implemented smart devices, such as signal attenuation or noise and other signal sources (e.g., coexisting technologies). Considering the flexibility in analyzing and prototyping communication protocols, this methodology has crucial drawbacks because both access technologies and higher

* Corresponding author.
E-mail addresses: sebastian.boehm@b-tu.de (S. Böhm), hartmut.koenig@b-tu.de (H. König).

https://doi.org/10.1016/j.comcom.2024.02.006
Received 6 June 2023; Received in revised form 29 January 2024; Accepted 5 February 2024
Available online 14 February 2024
0140-3664/© 2024 The Author(s). Published by Elsevier B.V. This is an open access article under the CC BY license (http://creativecommons.org/licenses/by/4.0/).

protocol layers with their implementations of the stacks poorly allow for customization and parameter studies.

In this paper, we summarize the fundamentals of our basic methodology and demonstrate a cross-layer optimization case study for energy efficient modeling using software-defined radios. With this work, we will elaborate the background of our basic methodology in detail, extend the problems and requirements of coupling simulation and emulation systems (such as the synchronization of the two frameworks), clarify the capabilities of the approach based on suitable scenarios regarding energy-efficient and cognitive IoT, and add more discussion of the proposed solution presented in [1]. In the following, Section 2 introduces the energy-efficient and *cognitive IoT* research area with its state-of-the-art challenges in modeling and evaluation. With the methodology of the *RIL* in Section 3, we give an overview of the unique features of using real radio hardware in the *Split-Protocol-Stack* [2,3] resulting from our parallel simulation and emulation experimentation in [4]. We state that this approach is designed to address current challenges in evaluating and prototyping both in terms of a specific wireless technology and as a general strategy for energy-efficient and cognitive IoT modeling. In this context, Section 4 illustrates the modeling capabilities of the RIL simulation by means of a cross-layer optimization case study. The evaluation results demonstrate the achieved accuracy and modeling flexibility. In Section 5, we give an outlook on further application areas and research trends, exemplary in wireless Smart City communication networks.

2. Energy-efficient and cognitive IoT device modeling

One of the major optimization goals in resource-constrained wireless networks are energy-efficient wireless transmissions. These objectives are mainly solved in the domain of wireless access technologies via short on-air times (low duty cycle). Within the context of wireless communication, the term *cognitive IoT* refers to the cognitive capabilities of smart devices within their operating environment and connected network. From a single node's point of view, smart sensors make decisions about protocol parameters or spectrum management and perform intelligent operation by analyzing network or radio conditions before transmitting. But all protocol layers and device parameters can be involved in the optimization of power consumption. For example, a monitoring application can choose favorable wireless transmission times or, if necessary, retain and aggregate data based on the possibly currently fluctuating channel state.

Cross-layer optimization is an essential concept for enabling cognitive capabilities. In contrast to modeling communications using reference designs (e.g., the Open Systems Interconnection (OSI) model), protocols and architectures can be optimized by violating layered communication based on performance, management, or security constraints. This results in new interfaces, re-definitions of layer boundaries, or a common coordination of parameters among the layers. However, implementing true node firmware for experimenting with cross-layer concepts is incredibly cumbersome. Network and protocol simulation are considered the state-of-the-art evaluation approach for cross-layer optimization due to their high flexibility in linking various modules and functions. In cognitive IoT networks also higher protocol layers are effected by the spectrum management and need reconfiguration based on PHY sensing information and radio access scheduling (cp. [5,6]).

Cognitive radio refers to the ability of a transmitting and receiving device to make better use of the white spaces in the spectrum to counteract packet loss due to interference and noise. These concepts increase the robustness and resilience of the wireless networks and save transmission energy by reducing unnecessary retransmissions based on cognitive decisions. *Intelligent* and adaptive MAC procedures are also focused for optimizing the spectrum utilization in order to reduce packet collisions. Prototyping and evaluation of radio channel near optimization needs accurate Channel State Information (CSI). For example, the authors of [7] present a list of requirements for prototyping the MAC layer and highlight the need to have access to accurate PHY information to enable PHY reconfiguration. They conclude that mixed hardware-software architectures of embedded Software-Defined Radio (SDR) platforms are the best choice to provide full flexibility and configurability.

In-network optimization refers to cognitive decisions of a scalable network. Protocol simulation offers very flexible possibilities to process state information of individual network nodes and communication links in abstract algorithms on middleware in the entire radio network. In the context of energy-efficient optimization (e.g., network lifetime enhancement), issues of link quality, network utilization, data compression, transmission latency, jitter or Quality of Service (QoS) have to be considered here. Again, accurate information from the PHY and realistic feedback from the radio channel can significantly increase the validity of simulation-based evaluations.

In this highly relevant research areas, for example, a number of IEEE 802.15.4 [8] based optimization approaches are reflected only in the purely simulative evaluation. Besides MAC-based optimization originating from higher protocol layers (e.g., *adaptive access parameter tuning* in [9], or efficient network coordinator selection in [10] - both evaluated in pure DES), a number of approaches that require high accuracy and close interaction of the PHY should also be mentioned. The *transmission power control* approach in [11], evaluated in DES, is based on location information tables of mobile networks. It defines new service primitives for passing node range information to the PHY. In contrast, *receiver sensitivity control* in [12] is proposed to increase the energy efficiency of receiver-dominated nodes in IoT networks, evaluated based on pure virtual simulation in OMNeT++ [13].[1] The radio propagation model is based on line-of-sight transmission, while no information is provided on modeling PHY channel interaction.

When considering practical contributions in the area of protocol stack-based network evaluation, Hardware-in-the-Loop (HIL) approaches emerge that differ in how hardware resources are represented in the overall design. These can be integrated by real components of a general purpose *host* computer system or correspond to real *external* devices. A further distinction can be made according to how protocol implementations of network devices are represented and what role simulation plays in the overall setup. This can be real hardware protocol implementations used in a *simulated network environment* or *simulated protocols* that interact with the network interface hardware. Related HIL approaches considering real protocol implementations in simulated networks (e.g., [14,15]) are unsuitable for the analysis and further development of the above mentioned cognitive IoT research areas, as they offer insufficient flexibility in the modeling of protocol and application flows.

In contrast, the concept of integrating real wireless transmissions with simulated protocol stacks is still a largely untouched area of research. So far, related HIL approaches that couple network simulations with real hardware usually do not focus on accurate radio communication (e.g., integrating hardware prototypes in vehicular network communication simulation in [16].) Enabling real transmissions from the simulation is applied by Obermaier et al. [17] and Klingler et al. [18] who both present a single node device testbed for vehicular network HIL simulation based on IEEE 802.11p. They split the network architecture vertically to implement a virtual network bridge for transmitting link layer data frames via a single gateway node, called *physical twin* in [17], within an uncontrolled radio environment to the real device under test. Obermaier et al. discuss the difficult communication overhead and the inevitable real-time violations of a large number of *external events*.

A HIL wireless network evaluation with up to four nodes is introduced by Ding et al. [19], where configurable radio front ends and

[1] OMNeT++ Discrete Event Simulator: https://www.omnetpp.org/.

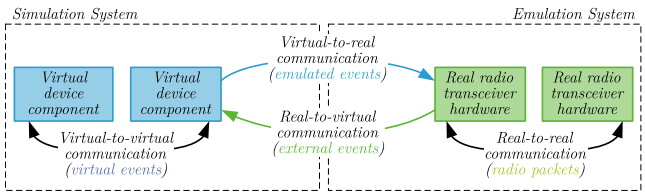

Fig. 1. Definition of terms and communication relations for the parallel simulation and emulation RIL methodology.

channel emulation techniques are used to control wireless transmissions. They do not include information on scalability and flexibility in modeling procedures within protocol stacks, and do not provide a variety of protocol models as it is common in protocol simulation frameworks.

Large-scale emulation test environments such as *Colosseum* [20] or *WiNeTesTer* [21], which were developed primarily for Radio Frequency (RF) and high-load traffic scenarios, provide a very good basis for implementing the RIL approach on a large scale. With emulation possibilities of 256 SDR nodes and the emulation of up to 65,535 radio channels in different environments, Colosseum offers enormous scaling possibilities. In interactive mode, our methodology is therefore also possible on such a system, but has not yet been conclusively evaluated.

3. Radio-in-the-Loop evaluation methodology

Based on our analysis, we argue that the functional requirements for accurate energy-efficient and cognitive IoT evaluation can be fulfilled by parallel simulation and emulation. With the methodology of *Radio-in-the-Loop (RIL)*, a new strategy of evaluation is proposed, which allows parallel execution of protocol simulation and channel emulation. Testbed characteristics are achieved with emulated wireless transmissions and simultaneous simulated protocol flows and abstract algorithms on each sensor node. Thus, detailed channel state information can be obtained from an accurate emulated channel and PHY parameters can precisely be adjusted on real transceiver hardware or completely reconfigured based on SDR modules instead of applying abstract information for packet data in pure discrete event simulation.

In Fig. 1 the communication relations with terms and definitions for the RIL interfacing are presented. Representing the PHY from a *Split-Protocol-Stack*'s perspective is achieved by modeling the interfaces, protocol primitives, parameters, services, and internal procedures based on *virtual* components, *real* hardware, and events. The RIL interface is responsible for exchanging *emulated* and *external* events between simulated nodes within the DES and real nodes on the testbed system. Furthermore, the *radio packets* represent real data transmission between real radio transceivers.

Running simulations in parallel with other environments presents many challenges, ranging from improving the DES environment to connectivity, synchronization, and resource allocation issues when involving physical real transmissions and node hardware within an evaluation scenario. Real-time capability is a key requirement for HIL simulation scenarios, as the hardware resources are running in a continuous environment. Thus, HIL is delay-sensitive by design, i.e., an experiment setup is often bound to a fixed transmission rate in network traffic with low latency and minimal jitter. In addition, there are some further requirements or research problems which are summarized and discussed below, derived from various related work on HIL modeling aspects, e.g., in [22,23], and [24]. The realization of these requirements with our solutions is then explained in the following sections.

Interfacing between simulation and hardware is crucial in HIL approaches, facilitating message exchange and control. A generic interface supports various physical interfaces using standardized data formats.

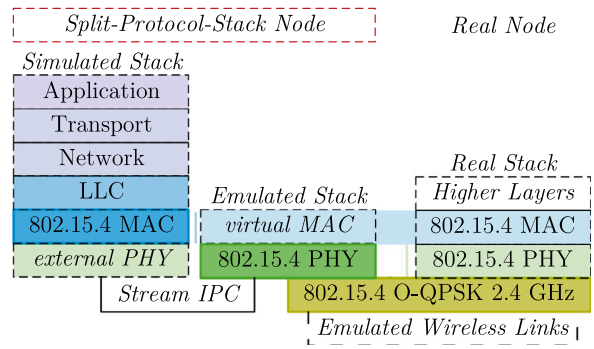

Fig. 2. Split-Protocol-Stack architecture of a wireless node.
Source: Taken from [2].

Synchronization is crucial when coupling a simulation with another parallel system to ensure events arrive on time and maintain the causal order of logical processes in real-time HIL simulations.

Scenario modeling and generation are essential tasks in simulation software for HIL, cluster, or co-simulation. Network simulators offer tools for simulation configuration, while hybrid simulations require additional configuration for coupled systems, like radio link emulation.

Resource allocation for nodes and infrastructure hardware is intricately linked to scenario configuration and hardware abstractions, ensuring accurate mapping between simulation scenarios and node hardware. The fixed boundaries of device hardware and network configurability in hardware-based radio link emulation pose a highly complex problem with accuracy and feasibility limitations.

In order to establish the novel RIL methodology, fundamental contributions have already been made by our work. Within the discrete-event protocol simulation, we have achieved accurate representation of the MAC layer for an example reference wireless specification, the model of the IEEE 802.15.4 protocol standard in [25]. We have implemented DES interfacing extensions to transmit emulated events to RIL hardware nodes in [26]. The details about our Packet Capture (PCAP) based in-band signaling, control flow and simulation–emulation message exchange (virtual-to-real and real-to-virtual) is presented and practically investigated in [4]. In [3], we demonstrate details of the accurate modeling of the RIL interface according to the specification of the link layer protocol by exemplary focusing the IEEE 802.15.4 PHY. The challenge of synchronizing the simulation and the emulation domain for scalable network scenarios has been introduced with the *Real-Time-Shift Simulation* approach for the superordinate *Split-Protocol-Stack* evaluation methodology in [2,27].

Fig. 2 shows an overview of the protocol stack of a wireless node. The MAC and all higher layers are simulated, but the PHY and radio channel are emulated with real wireless hardware.

3.1. Pseudo-real-time network simulation

The overall scenario modeling and configuration for the RIL wireless network simulation, running virtual higher layer protocols on physical real node hardware, is based on the simulation environment. To enable standard-conform access over the service access points and exchange the necessary service data units with the real hardware transceivers, an accurate representation of a desired link layer protocol specification is inevitable. Therefore, we rely on our high accuracy IEEE 802.15.4 simulation model [25,28] which is modeled in OMNeT++ strictly according to the specifications and general modeling guidelines of IEEE 802.15.4 [8]. For the RIL concept, we adapt and add emulation extensions to the simulation model for the scenario, dispatching, and scheduling. According to the *external PHY* of the *simulated stack* in Fig. 2, the interfacing is based on the physical layer of a node's protocol

stack. The conceptual and implementation details have been introduced with our *SEmulate* prototype in [4].

Due to our parallel simulation and emulation environment, the emulation domain also needs parametrization depending on the simulation scenario. Since congruently manual configuration of the emulation system can lead to a challenging and cumbersome task, we introduce an assisted emulation scenario configuration. We developed prototype parsers and generators for the emulation control system which accept the simulation configuration files (esp. the OMNeT++ `.ned` network definitions and `.ini` configurations) as inputs and generate the appropriate emulation system setup for a given scenario. Important parameters that must be configured consistently for the simulation scenario by the emulation system are, for example, the specified (geographic) position, the device type of a node, the PHY technology, and the radio channel parameters (e.g., frequency band, channel, and modulation scheme).

Due to the splitting between MAC and PHY, which is usually implemented to keep latencies in function calls between the two sublayers as short as possible, the time-synchronization between the two different domains and systems becomes a fundamental problem and bottleneck. Since the emulation hardware is connected via Local Area Network (LAN), it requires communication with other control computers. The required microsecond accuracy cannot be met, even over a dedicated network connection. However, if a constant, even (within limits) arbitrary, delay between the components is achieved, this can be recalculated afterwards according to our synchronization concept. We have introduced a pseudo-real-time scheduling as solution approach and basis for the synchronization, called *Real-Time-Shift* [2]. *Pseudo* means that the simulation runs at real-time, but the simulated real-time is temporarily manipulated by waiting times during the transmission of emulated and external events. Accordingly, the (virtual) simulation time is permanently *shifted* back and forth due to the event transmission delays.

3.2. Radio-in-the-Loop wireless transmissions

The interface between the abstract modeling of protocols and algorithms in simulation and the provision of realistic environments on the radio channel is the key of the *Radio-in-the-Loop (RIL)* approach. Essentially, this methodology creates the interfaces for simulation and emulation and represents the modeling of the PHY. Here all modeling areas of the radio interface are provided to interact with the real radio channel. The most important features to enable wireless packet transmission and reception are *modulation*, *carrier sensing*, *packet detection*, and *packet synchronization*. Usually a standard specification does not define, how to implement or model these features on specific platforms. Furthermore, modeling of PHY functions for wireless transmissions in real hardware can conceptually be achieved in fundamentally different ways, e.g., either in software via the SDR concept or by implementing interfaces and firmware for real radio chip hardware.

With RIL wireless transmissions, we assume that real radio hardware (components) represent the radio transceiver interface of a communication system that is capable to transmit and receive real radio packets. On the other hand, the hardware must be able to process several PHY functions, e.g., carrier sensing or energy detection. Thus, the use of real transceiver hardware in wireless network simulations allows for an accurate representation of the PHY domains (e.g., symbol and waveform domains). Furthermore, the radio hardware takes over the interface function from the simulation domain to the real radio environment in the emulation domain. According to Fig. 2, this is modeled with the *PHY* of the *emulated stack*. From the simulators point of view, the emulation domain is considered as *black box*. The RIL gateway nodes only take care of the interface which generates the message input data. For each *Split-Protocol-Stack* node, a physical data communication interface to the control subsystem is needed.

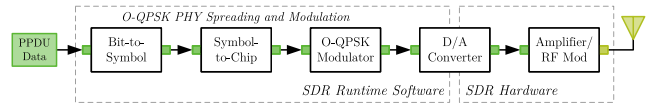

Fig. 3. Block diagram of an O-QPSK PHY SDR transmitter.

The *Chip-Radio-in-the-Loop* focuses on the use of standard-compliant radio chips of a given radio technology (e.g., IEEE 802.15.4). Implementing on a dedicated node firmware (cp. [4]) achieves high accuracy with respect to the specification, but this method does not allow flexibility for extending and manipulating the PHY domains.

The software radio-in-the-loop approach provides the ability for the *Split-Protocol-Stack* to access emulated radio channels with the highest flexibility of PHY interfaces. The example and reference model for the RIL transceiver is based on the *GNU Radio* framework,[2] an open source, multithreaded streaming system, in which models are build from basic building blocks. In [3] the layered software radio transceiver processing flow based on the top-level SDR components is introduced in detail. We have modeled the transceiver according to the division of the link layer into MAC and PHY that can clearly be observed in the hierarchical module structure of our model. Accordingly, flexible experimentation can be performed including accurate PHY transceiver modeling. Fig. 3 exemplary shows the block diagram of the software-based modeling of a wireless packet data transmission. Likewise, other services of the PHY specification, such as the Energy Detection (ED) or signal gain settings for receiving and transmitting, are also implemented in software building blocks.

3.3. Radio-in-the-Loop analog radio channel emulation

The real packet data from the PHY are transmitted as analog signals in the controllable RF channel emulation environment and can thus be manipulated in real-time. Besides the control and data communication to the hardware nodes, the main tasks of the emulation hardware are to provide resources for a given scenario and to emulate the effects in the analog radio domain. The most important feature of such systems is the configurable long-term fading. According to Fig. 2, this is modeled with *emulated wireless links*.

Based on the attenuation values, a static network is obtained which becomes a network with mobile nodes when changing these values permanently. The most hardware-based channel emulation approaches provide configurable RF components (e.g., step attenuators) between the nodes, but they do not discuss how to configure the radio frequency hardware equipment for a given scenario (e.g., a multi-hop network) with relative physical positions and distances of the nodes. Within this context, we provide first results of an approach for solving this complex task based on a Mixed Integer Linear Programming (MILP) optimization scheme in [26]. For pseudo-random mobility, fixed intervals can be defined for each attenuator and continuously changed during the system runtime (cp. the *RoSeNet* emulation testbed in [4]).

3.4. Radio-in-the-Loop evaluation scenarios

From a methodology perspective regarding the protocol stack, there are three basic kinds of nodes: simulated, Split-Protocol-Stack emulated, and real ones. *Simulated* nodes are entirely virtual. They consist of simulation modules for all system components and the protocol stack, whereas *real* nodes are implemented holistically in hardware and firmware. *Split-Protocol-Stack* emulated nodes (ref. Fig. 2) are composed according to our basic RIL methodology.

[2] GNU Radio is an open-source framework for development of SDR systems on general-purpose host systems: https://www.gnuradio.org/.

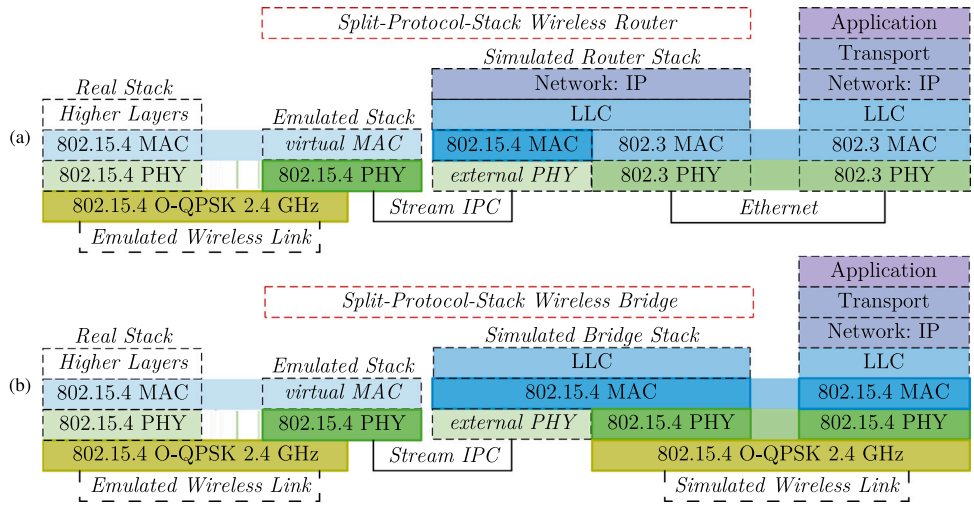

Fig. 4. Two configuration scenarios for hybrid gateway networks. **(a)** shows a router (layer 3) connected network to a Ethernet-based virtual wired standard computer network. **(b)** shows a bridge (layer 2) connected network to a IEEE 802.15.4-based virtual wireless sensor network.

A gateway configuration scenario (ref. Fig. 4) extends the pure emulated wireless network with other nodes and network components in the pure virtual simulation domain to form a hybrid network. This can be either wired network devices or wireless nodes with model-based virtual channel communication and interfacing. A *protocol gateway* node is equipped with a minimum of two parallel network stacks because it translates from one communication protocol to another. It can operate on all layers of the OSI reference model or the TCP/IP protocol stack. Considering a *Split-Protocol-Stack* node, a gateway has to translate to and from the RIL external node at least.

Fig. 4 shows two configuration scenarios with a *Split-Protocol-Stack* gateway each. A router (layer 3 gateway) node connecting to a different technology virtual wired network (e.g., IEEE 802.3 Ethernet) is abstracted in Fig. 4(a), while Fig. 4(b) shows a configuration scenario with a bridge (layer 2 gateway) node connecting to a same link layer technology (IEEE 802.15.4 PHY) virtual wireless network. Of course, these hybrid network configuration scenarios can also include additional basic *Split-Protocol-Stack* nodes.

Since star networks are still the most widely used topologies for wireless networks in practice, often only one central node of the scenario is emulated as a gateway that connects to a larger (wired or wireless) control network, while other nodes are running sense and control applications. Extending a radio channel emulated network with a virtual control network is the recommended configuration scenario, as it serves as a perfect basis for wireless IoT perception layer security research or heterogeneous wireless networks and technology interoperability. Inside the simulation environment, for example, a larger network attack scenario can be prepared to attack or disturb a real network on the testbed.

Considering the whole setup as a homogeneous wireless network (e.g., a Wireless Sensor Network (WSN)), the entire radio communication is emulated on the hardware testbed. The *Split-Protocol-Stack* nodes can be analyzed in the simulation regarding the communication with the PHY and all protocols of the higher layers. This configuration scenario is fundamental to create dense radio environments for the analysis of protocols and applications based on emulated nodes for robust networks. In addition, it serves as an excellent basis for studying machine learning strategies embedded in the protocol stack, and for cross-layer optimization strategies in cognitive radio networks.

4. Case study: Cross-layer optimization

The methodology of combining protocol simulation and radio channel emulation is suitable to meet the challenges in modeling and evaluation of future wireless networks and cognitive IoT. This approach has not established yet, but the potential of this technique is demonstrated in this case study for optimizing the receiver using RIL.

As mentioned in Section 2, optimization of performance parameters for transmitter and receiver is one of the main goals in cross-layer optimization regarding the PHY in energy-efficient IoT (e.g., increasing the energy efficiency with transmission power and receiver sensitivity control). The RIL methodology can be used to incorporate accurate real-world CSI for energy-efficient and reliable PHY transmissions in network simulations. Accordingly, we create here a use case and reference scenario that serve as an example of a *pure wireless* evaluation setup with no other simulated network nodes. It practically illustrates the contribution of parallel simulation and channel emulation for the evaluation of new approaches considering physical channel accuracy while maintaining protocol modeling flexibility. With this case study scenario, we demonstrate a receiver-dominated optimization based on the gain settings according to the radio packets signal strength measurement. In particular, it demonstrates the feasibility in a holistic *Split-Protocol-Stack* evaluation including SDR RIL transceivers. The overall goal of adjusting the receiver gain based on the LQI and ED using SDR is similar to a *feedback control* and aims at minimizing the energy consumption of a receiver, which is definitely beneficial for maximizing the lifetime of sensor nodes in *Smart City* applications.

Whereas the ED is the most important part of the channel selection algorithm, the LQI indicates the reliability of a used wireless link. It is often a decision criterion for whether a partial channel or route is selected for transmission. For 802.15.4 transceiver hardware, it is not specified, how to use the LQI value, but it should be performed for each received radio packet. It is mostly implemented using a signal-to-noise ratio estimation and is represented as an integer ranging from 0 to 255 (lowest to highest quality). The result of the ED is also given in this range of values and represents the normalized received signal power (Received Signal Strength Indicator (RSSI)).

The variations of the RSSI in reference measurements with deviations of several dB highlight the fact that environmental properties are hardly constant (cp. [29]). An efficient node placement with static configuration of the transmit power based on the signal strength measurements is, therefore, scarcely feasible and wastes energy/battery capacity. Not least in the practical measurement studies, the potential for optimization has become clear, as all packets are reliably received in a broader signal strength range. Looking at the results of our SDR RIL implementation in the following, with a bandwidth of approx. 20 dB difference in reception gain, all packets can be received without exception.

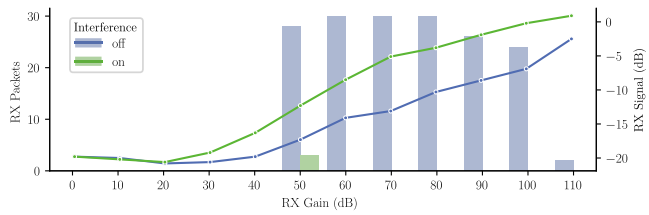

Fig. 5. Received signal strength and packet count at the software RIL model as a function of the receiver sensitivity (RX gain).

4.1. Energy detection measurement

A parameter study is required to determine favorable device parameters for general purpose SDR hardware and to estimate the possibilities of saving energy when transmitting and receiving packets. For example, we performed several reference measurements with ordinary indoor channel characteristics in our office to evaluate the packet reception and parameter setting for the carrier sensing based on the ED signal probing with the specified normalization scheme. We set up a standard-compliant chip hardware (TI CC2420) placed at a distance of 0.75 m from our software radio module to send a burst of 30 radio packets each. Fig. 5 shows the dependence of packet reception on the receiver interface gain setting (RX gain) based on packet rate and signal strength.

In the reception gain range of 60–80 dBm, all packets could be received by the software radio transceiver under realistic uncontrollable but largely interference-free environmental conditions. Moreover, a higher reception gain at the antenna has a clearly negative effect on the packet reception (ref. packet reception rate @ 110 dB in Fig. 5). Thus, the receiver is already slightly overdriven due to the activated baseband amplifier. If the jammer was enabled (*Gaussian* noise with additional signal intensity around the transmit power) only a few packets were received at all due to the difficult or impossible decoding. Below 50 dB RX gain no packets could be received by the receiver because the signal-to-noise ratio for this environment was not sufficient. Based on such measurements, the threshold value for the ED can be determined or receiver-based optimization techniques can be explored.

4.2. Scenario modeling and definition

The abstract optimization goal for the cross-layer optimization scenario is to permanently keep the LQI for a communication link at 255 (maximum value) while minimizing the sensitivity at the receiver (RX gain). In existing 802.15.4 chip implementations, the receiver sensitivity cannot be adjusted at all or at least not uniformly according to a common guideline. Moreover, the standard does not define any protocol message and PHY parameters for setting the receiver gain but only minimum values. Here, the modeling diversity of SDR transceivers in the context of the RIL PHY is proven. In a realistic channel emulation scenario, long-term measurements based on real transmissions can thus be evaluated without the need to develop real transceiver implementations for specific node hardware. An higher layer module in terms of an optimization algorithm in the simulation can be used to control this adjustments, but it requires access to the PHY and channel information. With only a few extensions, a simple information exchange across layer boundaries can be enabled for parametrization of the RIL PHY transceiver hardware according to the *Split-Protocol-Stack*. Next, we explain these extensions to the simulation model.

4.2.1. PHY information database

IEEE 802.15.4 [8] defines PHY constants that are hardware-dependent (cannot be changed during operation) and Personal Area Network Information Base (PIB) attributes which are partially *read-only* parameters. As depicted in Fig. 6, the PIB is provided in the

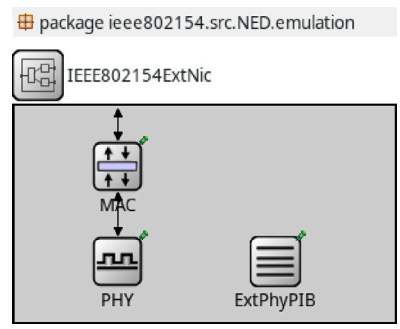

Fig. 6. The 802.15.4 OMNeT++ link layer module with external PHY PIB.

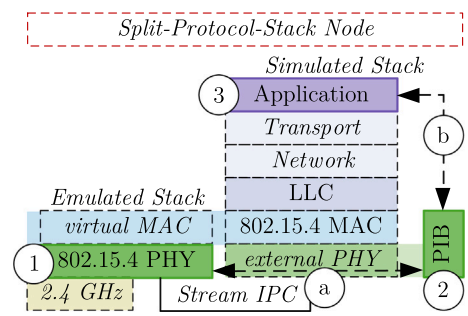

Fig. 7. Cross-layer PIB interaction from a higher layer of the protocol stack.

simulation as a distributed database (simulation module) for all layers in this simplified cross-layer scenario. Therefore, new interfaces must be introduced in the involved protocol layers for communicating with this module (ref. ② in Fig. 7). This approach and implementation via an *external* database can be found in most cross-layer approaches in addition to direct individual cross-layer communication.

4.2.2. PHY parameters

To enable a higher layer to perform adjustments of the RX gain based on the current LQI and ED values additional parameters must be introduced. The additional hardware parameters are provided by extending the PIB defined in the standard with additional information. They are transmitted via the original protocol primitives (`PLME-SET.request`'s and `PLME-GET.request`'s). Furthermore, the resulting external PIB cross-layer database is updated according to parameter-individual requests or for all attributes simultaneously according to a new protocol primitive `PLME-GET-PHY-PIB`. The manipulation of the database on the RIL hardware is restricted to the *external* PHY simulation module (ref. *emulated event* ⓐ between ② and ① in Fig. 7), but higher layers can have access to the information and request to perform an attribute change (*virtual events* ⓑ).

For the example receiver-dominated cross-layer approach, the following additional PIB attributes are defined.

- *phyLQI (link quality - from packet reception),*
- *phyEDvalue (channel energy - from signal),*
- *phyRXgain (sensitivity - according to amplifier gain).*

The application layer module (③ in Fig. 7) is called `trafficgen` (adaptation of a standard OMNeT++ module for traffic generation). It implements a simple feedback control process according to the scenario definition and objective. The scenario is started in a configuration in which radio packets are received with maximum channel quality ($phyLQI = 255$). A feedback follows after each received packet via a gradual decrease of the receiver's sensitivity by adjusting the corresponding SDR hardware parameters as long as the channel quality

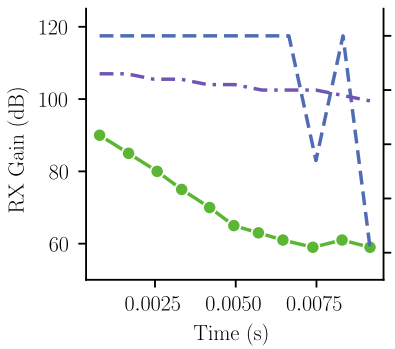

Fig. 8. LQI-based RX gain adaption (initialized with 90 dB).

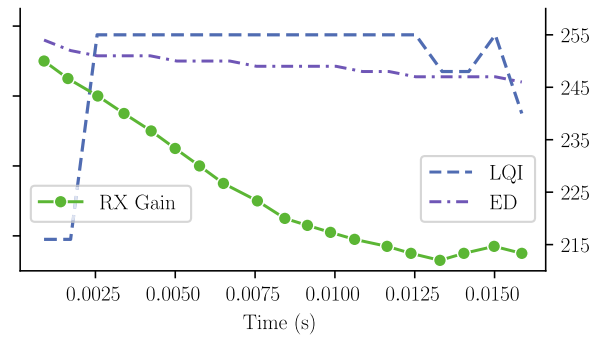

Fig. 9. LQI- and ED-based RX gain adaption (initialized with 110 dB, LQI below maximum).

does not change. Once the LQI deviates downward, the sensitivity is increased again to compensate this deviation.

The example implementation of the event handling in the OMNeT++ application layer module `trafficgen` is presented in the following. Note that Listing 1 shows as an example excerpt only the reduction of the RX gain for the case when the maximum link quality, given by the LQI value, has been reached.

Listing 1: Cross-layer optimization event handling - excerpt from `trafficgen.cc` in OMNeT++

```
void trafficgen::handleMessage(cMessage *msg)
{
  if (mappedMsgTypes[msg->getName()]==GETCONFPPIB) {

    GetPPIBConfirm *conf=check_and_cast<GetPPIBConfirm*>(msg);
    lqi=conf->getPIBLQI();
    rxGain=conf->getPIBrxgain();
    ED=conf->getPIBsignalstrength();

    if(lqi==255) {
      SetRequest* PhyPIBSet=new SetRequest("PLME-SET.request");
      PhyPIBSet->setPIBattr(rxgain);

      if(rxGain<=51) PhyPIBSet->setValue(rxGain-1);
      else if(rxGain<=65) PhyPIBSet->setValue(rxGain-2);
      else if(rxGain<=115) PhyPIBSet->setValue(rxGain-5);

      sendDirect(PhyPIBSet,simulation.getModule(ppibID), "inDirect");

    }
}
```

4.3. Evaluation

Using our prototype implementation with OMNeT++ and *GNU Radio*, two measurement series with different radio channel settings were carried out as representative examples. A connection to the radio channel emulation could not be realized in this scenario, since the corresponding hardware interface connection for the SDR RIL concept is not yet realized within the prototype. As consequence, uncontrollable real conditions arise for an indoor radio channel which are also suitable for this case study and demonstration. In the first experimental setup, the transmitter and receiver were placed at a distance of 1 m from each other and an initial RX gain of 90 dBm was configured to avoid noise due to the analyzed overload with too high receiver sensitivity in Fig. 5.

The result in Fig. 8 illustrates the potential of this type of receiver-dominated optimization. It shows the gradual reduction in gain at the receiver for each radio packet received over the simulated time. The RX gain at the antenna of the receiver can significantly be reduced (in the range of up to 30 dB) without degrading the channel quality and thus the fault tolerance for wireless data communication. Beyond a threshold of 59 dB, the channel quality LQI is no longer maximum under these conditions and is set back up one level by the feedback loop. Since the maximum value is again reached for the next radio packet, this process is be repeated now continuously (depending on the conditions on the radio channel). Thus, this experimental setup demonstrates how to control a real-world wireless transmission based on an abstract algorithm in the network simulation.

The goal of the second experimental setup was to consider the largest possible link budget for the optimization. For this purpose, transmitter and receiver nodes were placed very close to each other (a few cm) and the measurement series were initially parametrized with a very high sensitivity of 110 dB gain at the receiver. Because of the high noise when dealing with high signal levels, the feedback algorithm additionally needs the signal energy ED to decide about reducing or increasing the RX gain (LQI below the maximum at high signal energy still leads to a reduction of RX gain). Thus, for each packet reception the LQI and ED values were evaluated for this exemplary demonstration. According to the results in Fig. 9, the link quality in this setup is maximum within a link budget of 45 dB (100 dB to 55 dB) which allows for significant energy consumption optimization on the receiver.

In the same way, the transmitter can be parametrized to reduce the transmission energy in a control loop based on the evaluation of the received acknowledgments. A corresponding attribute for the hardware configuration of the transmission power (*phyTXgain*) is also part of our extensions for the external PIB. Of course, other criteria and parameters can be included in the optimization beyond this simple scenario.

5. Conclusions

In this paper we have represented a conceptual overview of our methodology. We exemplary present a scenario of the *Radio-in-the-Loop (RIL)* simulation for the model-based prototyping and evaluation, where parameters can be easily changed within the algorithmic simulation and SDR domain. Thus, algorithms do not need to be implemented in protocol stacks and firmware. The achieved results demonstrate the feasibility of the approach for modeling a cross-layer optimization strategy with parallel simulation and emulation. For practical use, it shows the possibility to ensure reliable transmissions while reducing the gain in reception at the same time. Furthermore, the energy consumption of the RIL hardware modules can be recorded simultaneously for analyzing the energy-efficiency. Some more practical and theoretical considerations or concrete extensions of the scenario may cover different state-of-the-art research areas.

The battery life of wireless devices is certainly reduced by *radio spectrum pollution*, since the nodes have to transmit above the noise level which in turn creates additional interferences. As digital transformation continues, radio usage of areas and hotspots is increasing rapidly due to various technologies. The current and upcoming IoT and *Smart City* concepts with countless surrounding wireless devices in the urban area will make this situation much worse. Dense radio conditions are neither easy to determine nor predict, and even more

difficult to model for *radio network planning*. The purely simulative modeling of radio interference and pollution causes an incredible effort and therefore often remains abstract or a theoretical consideration. However, taking these effects into account will become increasingly important in the prototyping and performance evaluation of modern techniques and optimization methods due to the expanding penetration of wireless technologies in the future. In our simplified case study optimization approach, we have already been able to demonstrate, how an evaluation of intelligent approaches can be achieved by including real or emulated radio environments by means of *RIL*. Future research activities in wireless communication modeling will inevitably depend on the simulation of algorithmic flows with real-world accuracy or emulation capabilities.

Cross-layer optimization and *cognitive radio* have been a continuously growing, red-hot research focus for more than a decade now. Current activities on cognitive radio networks address, for example, research issues of *energy harvesting* for *spectrum-efficient networking* in the IoT [30], jointly consider radio transceiver design and network data transmissions. Concrete evaluation results are mostly determined pure simulatively. Regarding *security vulnerabilities* in untrustworthy urban environments, the radio packet parameters can be evaluated in detail. If a packet is received with a deviating radio fingerprint (e.g., signal strength, or *time difference of arrival*), an intelligent higher layer algorithm can trigger an alarm or interrupt the communication. PHY- and channel-accurate model-based evaluation and prototyping of such approaches can be extended with real-world measurements from RIL SDRs. Further cross-layer consideration of parameters from several protocol layers is also conceivable, so that an intelligent algorithm considers both simulatively generated parameters and real hardware attributes from different node and network properties.

Deep Learning for future wireless communications is an emerging interdisciplinary paradigm which will revolutionize wireless networking by means of artificial intelligence. For example, these strategies evaluate several hardware parameters and CSI for a period of time to decide which physical parameters should be configured for a transmission. Recent studies, surveys, and approaches (e.g., [31–33]) show how *Deep Learning* on the physical layer and radio channel can stimulate transmission algorithms or transceiver design for coexistence of multiple radio access technologies or optimal transmission links for ultra-low latency constraints in dense networks. Specific solutions concern, for example, the channel coding in [34] or the modulation classification based on *Neural Networks* in [32]. Therefore, *radio fingerprinting* and *spectrum analysis* for feature engineering in *Neural Networks* are key elements. We consider our SDR RIL methodology for acquiring features of the radio channel to enable prototyping for reconfigurable PHY using software building blocks an important step in this direction. Holistic modeling using the RIL concept is perfectly suited for parameter studies from real-world measurements in the simulation. Existing machine learning algorithms can easily be integrated into DES in a higher programming language (e.g., *C++* or *Python*).

The *Split-Protocol-Stack* evaluation strategy is applicable to other protocols or systems and harmonizes the modeling process, since layers, interfaces, and protocol messages are accurately modeled according to the standard specifications. They can be extended as needed for specific modeling purposes. Thus, the evaluation methodology enables cooperation and creates synergies in an interdisciplinary field of expertise. *Future work* will follow up on the key findings and prototypes from this work and incorporate them into existing workflows to provide evaluation tools for upcoming requirements. Thus, in addition to the contributions we have accomplished, there are further challenges to extend our basic concept and to be able to provide a powerful platform beyond the prototype implementation.

Implementing the *Real-Time-Shift* event stream processing [2] on the emulation control hardware would be one of the most important further implementation steps. Since the RIL real-time stream processing in our prototype is currently implemented for a standard host system, accurate scheduling for the nodes on the channel emulation platform cannot be applied in practice up to now. Furthermore, it should be investigated how SDR module integration and the full execution of *GNURadio* can be implemented on the radio channel emulation hardware.

According to the framework modeling philosophy (e.g., OMNeT++ / INET *modules*, or GNU Radio *blocks*), the RIL simulation capabilities can be provided for various standards, protocols, or further wireless link layer technologies for which there is often already support for the used environments. To enable broad support for current wireless technologies within the context of *Smart Cities*, the next steps will be to integrate the latest specifications as models for the DES and SDR streaming systems. Therefore, existing models for *cellular IoT*, or *LoRaWAN* (e.g., [35], or [36]) must be examined for accuracy and conformance to specifications. Implementation of the appropriate shared protocol libraries and generation of *external* and *emulated* events for transmission and handling of protocol messages are the steps to support the intended wireless technologies for RIL.

CRediT authorship contribution statement

Sebastian Böhm: Conceptualization, Methodology, Software, Validation, Investigation, Data curation, Writing – original draft, Writing – review & editing, Visualization, Project administration, Funding acquisition. **Hartmut König:** Writing – review & editing, Supervision.

Declaration of competing interest

The authors declare that they have no known competing financial interests or personal relationships that could have appeared to influence the work reported in this paper.

Data availability

Data will be made available on request.

Acknowledgments

Parts of this work were supported by BTU Graduate Research School (GradV Short-term Scholarship), Germany.

References

[1] S. Böhm, H. König, Radio-in-the-loop simulation modeling for energy-efficient and cognitive IoT in smart cities: A cross-layer optimization case study, in: 2023 18th Wireless on-Demand Network Systems and Services Conference, WONS, IEEE, 2023-01, http://dx.doi.org/10.23919/wons57325.2023.10062069.

[2] S. Böhm, H. König, Real-time-shift: Pseudo-real-time event scheduling for the split-protocol-stack radio-in-the-loop emulation, in: Proceedings of the 25th International Conference on Modeling Analysis and Simulation of Wireless and Mobile Systems, MSWiM, ACM, 2022, http://dx.doi.org/10.1145/3551659.3559057.

[3] S. Böhm, H. König, Split-protocol-stack wireless network emulation: Enabling PHY modeling diversity with software-radio-in-the-loop, in: Proceedings of the 17th ACM Symposium on QoS and Security for Wireless and Mobile Networks, Q2SWinet '21, ACM Press, 2021, p. 8, http://dx.doi.org/10.1145/3479242.3487319.

[4] S. Böhm, H. König, Semulate: Seamless network protocol simulation and radio channel emulation for wireless sensor networks, in: Proceedings of the 15th Annual Conference on Wireless on-Demand Network Systems and Services, WONS, IEEE, 2019, p. 8, http://dx.doi.org/10.23919/WONS.2019.8795495.

[5] S. Pandit, G. Singh, Framework for cross-layer optimization in cognitive radio network, in: Spectrum Sharing in Cognitive Radio Networks, Springer International Publishing, 2017, pp. 225–251, http://dx.doi.org/10.1007/978-3-319-53147-2_10.

[6] A.B. Ozgur, O. Karli, O. Ergul, Cognitive radio sensor networks, IEEE Netw. 23 (4) (2009) 34–40, http://dx.doi.org/10.1109/mnet.2009.5191144.

[7] F.V. Gallego, J. Alonso-Zarate, C. Verikoukis, L. Alonso, A survey on prototyping platforms for the development and experimental evaluation of medium access control protocols, IEEE Wirel. Commun. 19 (1) (2012-02) 74–81, http://dx.doi.org/10.1109/mwc.2012.6155879.

[8] IEEE Standards Association, Part 15.4: Wireless Medium Access Control (MAC) and Physical Layer (PHY) Specifications for Low-Rate Wireless Personal Area Networks (WPANs), The Institute of Electrical and Electronics Engineers, Inc., 2006, http://dx.doi.org/10.1109/IEEESTD.2006.232110.

[9] M.D. Francesco, G. Anastasi, M. Conti, S.K. Das, V. Neri, Reliability and energy-efficiency in IEEE 802.15.4/ZigBee sensor networks: An adaptive and cross-layer approach, IEEE J. Sel. Areas Commun. 29 (8) (2011-09) 1508–1524, http://dx.doi.org/10.1109/jsac.2011.110902.

[10] F. Cuomo, A. Abbagnale, E. Cipollone, Cross-layer network formation for energy-efficient IEEE 802.15.4/ZigBee wireless sensor networks, Ad Hoc Netw. 11 (2) (2013-03) 672–686, http://dx.doi.org/10.1016/j.adhoc.2011.11.006.

[11] M. Al-Jemeli, F.A. Hussin, An energy efficient cross-layer network operation model for IEEE 802.15.4-based mobile wireless sensor networks, IEEE Sensors J. 15 (2) (2015-02) 684–692, http://dx.doi.org/10.1109/jsen.2014.2352041.

[12] P. Detterer, M. Nabi, H. Jiao, T. Basten, Receiver-sensitivity control for energy-efficient IoT networks, IEEE Commun. Lett. 25 (4) (2021-04) 1383–1386, http://dx.doi.org/10.1109/lcomm.2020.3041935.

[13] A. Virdis, M. Kirsche (Eds.), Recent Advances in Network Simulation, Springer International Publishing, 2019, http://dx.doi.org/10.1007/978-3-030-12842-5.

[14] E. Weingärtner, H. vom Lehn, K. Wehrle, Device driver-enabled wireless network emulation, in: Proceedings of the 4th International Conference on Simulation Tools and Techniques, SimuTools, ICST, Barcelona, Spanien, 2011, http://dx.doi.org/10.4108/icst.simutools.2011.245543.

[15] S. Unterschütz, V. Turau, A hybrid testbed for a seamless combination of wireless sensor networks and OMNeT++ simulations, in: 11. GI/ITG KuVS FachgesprÄch Sensornetzwerke, GI/ITG, Darmstadt, Deutschland, 2012, pp. 52–55, URL http://citeseerx.ist.psu.edu/viewdoc/summary?doi=10.1.1.348.6422.

[16] D.S. Buse, M. Schettler, N. Kothe, P. Reinold, C. Sommer, F. Dressler, Bridging worlds: Integrating hardware-in-the-loop testing with large-scale VANET simulation, in: 2018 14th Annual Conference on Wireless on-Demand Network Systems and Services, WONS, IEEE, 2018, http://dx.doi.org/10.23919/wons.2018.8311659.

[17] C. Obermaier, R. Riebl, C. Facchi, Fully reactive hardware-in-the-loop simulation for VANET devices, in: Proceedings of the 21st International Conference on Intelligent Transportation Systems, ITSC, IEEE, 2018-11, http://dx.doi.org/10.1109/itsc.2018.8569663.

[18] F. Klingler, G.S. Pannu, C. Sommer, F. Dressler, Poster: Connecting simulation and real world: IEEE 802.11p in the loop, in: Proceedings of the 23rd Annual International Conference on Mobile Computing and Networking, MobiCom, ACM, 2017-10, http://dx.doi.org/10.1145/3117811.3131265.

[19] L. Ding, Y. Sagduyu, J. Yackoski, B. Azimi-Sadjadi, J. Li, R. Levy, T. Melodia, High fidelity wireless network evaluation for heterogeneous cognitive radio and networks, in: Proceedings of the SPIE Defense, Security, and Sensing Conference, 2012, http://dx.doi.org/10.1117/12.919273.

[20] L. Bonati, P. Johari, M. Polese, S. D'Oro, S. Mohanti, M. Tehrani-Moayyed, D. Villa, S. Shrivastava, C. Tassie, K. Yoder, A. Bagga, P. Patel, V. Petkov, M. Seltser, F. Restuccia, A. Gosain, K.R. Chowdhury, S. Basagni, T. Melodia, Colosseum: Large-scale wireless experimentation through hardware-in-the-loop network emulation, in: 2021 IEEE International Symposium on Dynamic Spectrum Access Networks, DySPAN, IEEE, 2021-12, http://dx.doi.org/10.1109/dyspan53946.2021.9677430.

[21] J.D. Beshay, K.S. Subramani, N. Mahabeleshwar, E. Nourbakhsh, B. McMillin, B. Banerjee, R. Prakash, Y. Du, P. Huang, T. Xi, et al., Wireless networking testbed and emulator (WiNeTestEr), Comput. Commun. 73 (2016) 99–107, http://dx.doi.org/10.1145/2641798.2641809.

[22] T. Baumgartner, D. Bimschas, S.P. Fekete, S. Fischer, A. Kröller, M. Pagel, D. Pfisterer, Demo abstract: Bridging the gap between simulated sensor nodes and the real world, in: Proceedings of the 4th International Workshop on Real-World Wireless Sensor Networks, REALWSN, Springer, 2010, pp. 174–177.

[23] M. Tüxen, I. Rüngeler, E.P. Rathgeb, Interface connecting the INET simulation framework with the real world, in: Proceedings of the 1st International Conference on Simulation Tools and Techniques, SIMUTools, ICST (Institute for Computer Sciences, Social-Informatics and Telecommunications Engineering), 2008, pp. 40:1–40:6, http://dx.doi.org/10.1145/1416222.1416267.

[24] J. Kölsch, C. Heinz, S. Schumb, C. Grimm, Hardware-in-the-loop simulation for Internet of Things scenarios, in: Proceedings of the 2018 Workshop on Modeling and Simulation of Cyber-Physical Energy Systems, MSCPES, 2018, pp. 1–6, http://dx.doi.org/10.1109/MSCPES.2018.8405399.

[25] M. Kirsche, M. Schnurbusch, A new IEEE 802.15.4 simulation model for OMNeT++ / INET, in: Proceedings of the 1st International OMNeT++ Community Summit, OMNeT, 2014, URL http://arxiv.org/abs/1409.1177.

[26] S. Böhm, M. Kirsche, Unifying radio-in-the-loop channel emulation and network protocol simulation to improve wireless sensor network evaluation, in: M. Baum, G. Brenner, J. Grabowski, T. Hanschke, S. Hartmann, A. Schöbel (Eds.), Simulation Science, Springer International Publishing, 2018, pp. 219–238, http://dx.doi.org/10.1007/978-3-319-96271-9_14.

[27] S. Böhm, H. König, Real-time-shift: Pseudo-real-time event scheduling for the split-protocol-stack radio-in-the-loop emulation, Comput. Commun. 209 (2023) 273–282, http://dx.doi.org/10.1016/j.comcom.2023.07.013.

[28] M. Kirsche, Selected System Models - IEEE 802.15.4, in: K. Wehrle, M. Guenes, J. Gross (Eds.), Modeling and Tools for Network Simulation, Springer, 2010, pp. 276–303, http://dx.doi.org/10.1007/978-3-642-12331-3.

[29] M.S. Hossen, M.K.B. Kamal, M.S. Rahman, Consistency analysis of RSSI measurement for distance estimation of wireless sensor nodes, in: Proceedings of the 15th International Conference on Computer and Information Technology, ICCIT, IEEE, 2012, http://dx.doi.org/10.1109/iccitechn.2012.6509752.

[30] J. Ren, J. Hu, D. Zhang, H. Guo, Y. Zhang, X. Shen, RF energy harvesting and transfer in cognitive radio sensor networks: Opportunities and challenges, IEEE Commun. Mag. 56 (1) (2018-01) 104–110, http://dx.doi.org/10.1109/mcom.2018.1700519.

[31] Z. Qin, H. Ye, G.Y. Li, B.-H.F. Juang, Deep learning in physical layer communications, IEEE Wirel. Commun. 26 (2) (2019-04) 93–99, http://dx.doi.org/10.1109/mwc.2019.1800601.

[32] T. O'Shea, J. Hoydis, An introduction to deep learning for the physical layer, IEEE Trans. Cogn. Commun. Netw. 3 (4) (2017) 563–575, http://dx.doi.org/10.1109/tccn.2017.2758370.

[33] R.-F. Liao, H. Wen, J. Wu, F. Pan, A. Xu, Y. Jiang, F. Xie, M. Cao, Deep-learning-based physical layer authentication for industrial wireless sensor networks, sensors 19 (11) (2019) 2440.

[34] H. Kim, S. Oh, P. Viswanath, Physical layer communication via deep learning, IEEE J. Sel. Areas Inf. Theory 1 (1) (2020-05) 5–18, http://dx.doi.org/10.1109/jsait.2020.2991562.

[35] M. Slabicki, G. Premsankar, M.D. Francesco, Adaptive configuration of lora networks for dense IoT deployments, in: NOMS 2018 - 2018 IEEE/IFIP Network Operations and Management Symposium, IEEE, 2018, http://dx.doi.org/10.1109/noms.2018.8406255.

[36] J. Tapparel, O. Afisiadis, P. Mayoraz, A. Balatsoukas-Stimming, A. Burg, An open-source LoRa physical layer prototype on GNU radio, in: Proceedingsof the 21st IEEE International Workshop on Signal Processing Advances in Wireless Communications, SPAWC, IEEE, 2020-05, http://dx.doi.org/10.1109/spawc48557.2020.9154273.